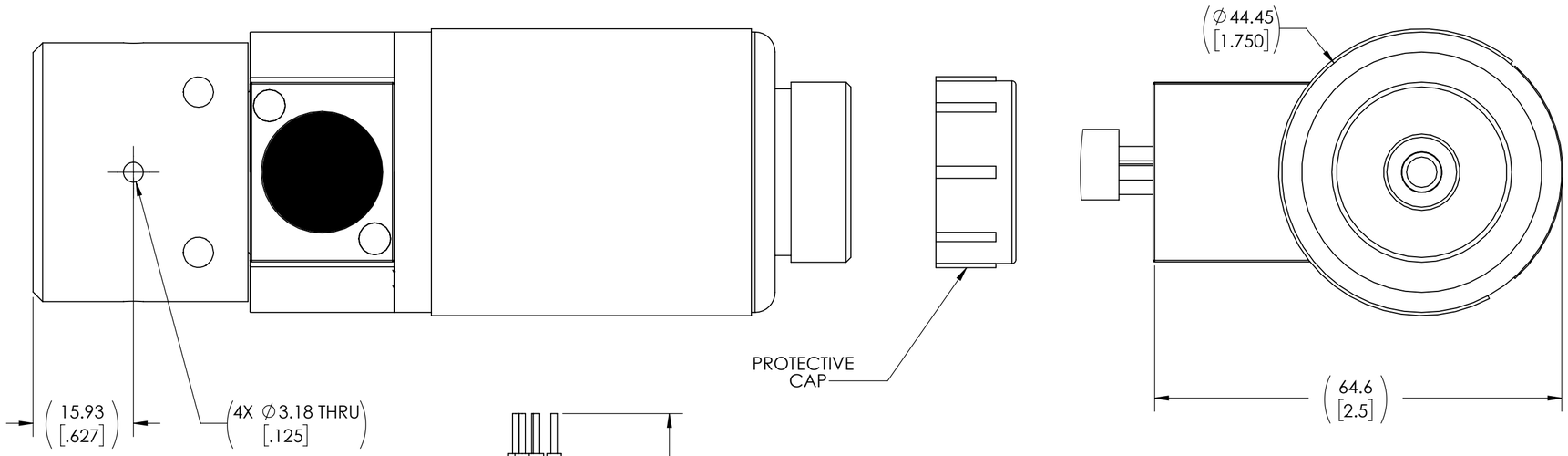

Options highlighted can be customized to fit your system. Give us a call to discuss your requirements.

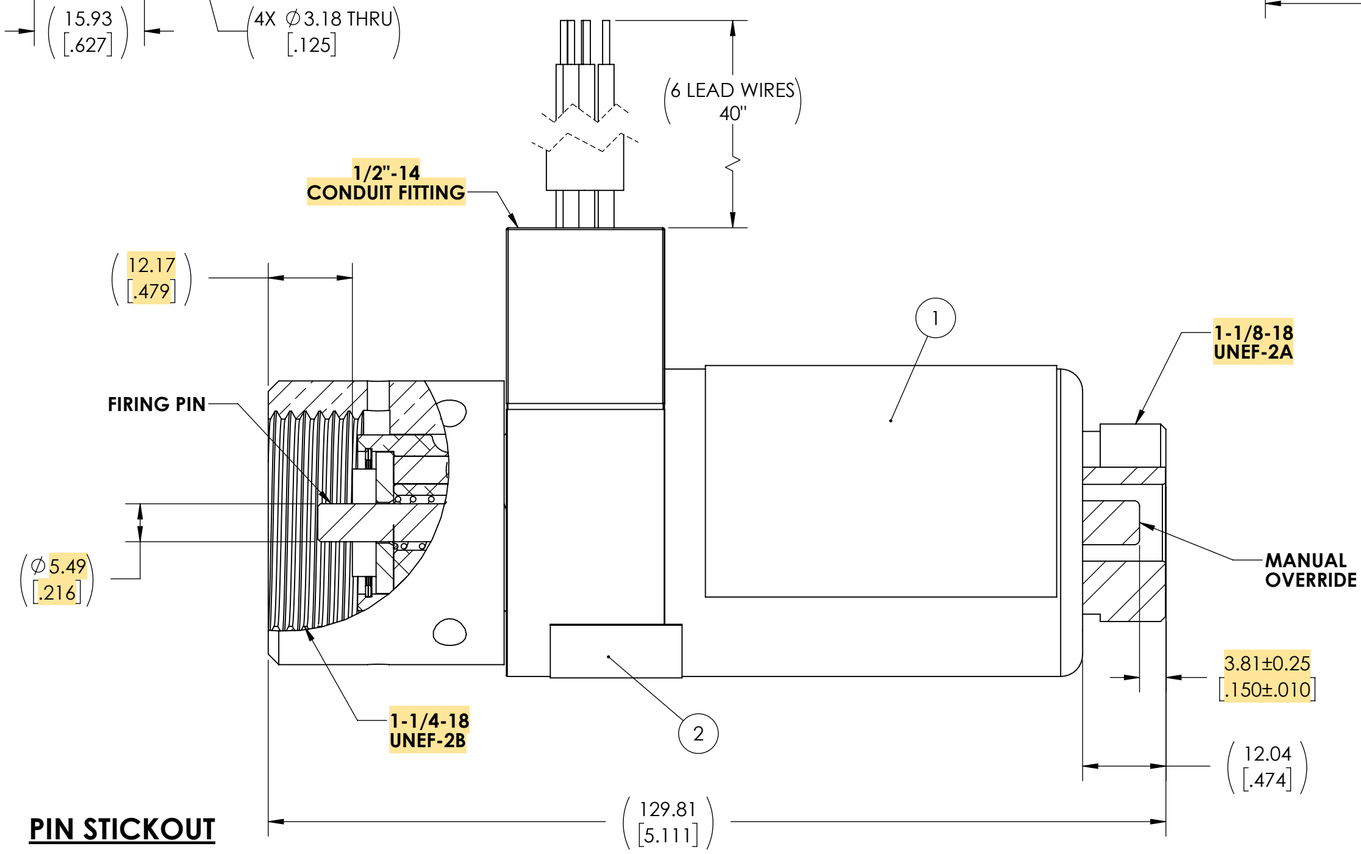

PIN STICKOUT

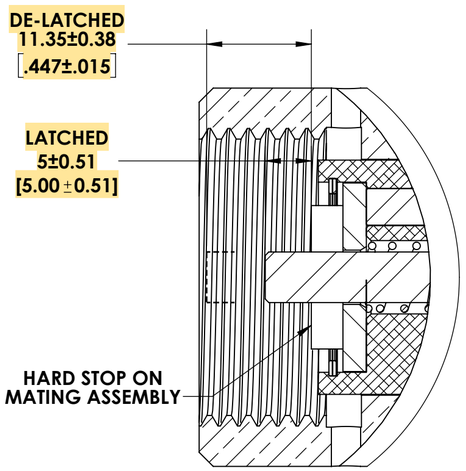

NOTES:

1. SUPERVISED LATCHING SOLENOID ACTUATOR
   TLX TECHNOLOGIES, PEWAUKEE, WI.
   PHONE: 262-970-8660, FAX: 262-970-8665

2. ELECTRONIC REQUIREMENTS/CONFIGURATIONS:
   A. VOLTAGE SUPPLY: 24 VDC
   B. CURRENT SUPPLY: 0.5A
   C. MONITORING CURRENT: <30mA
   D. NORMALLY CLOSED SUPERVISORY SWITCH (SWITCH OPEN WHEN ACTUATOR IS INSTALLED)
   E. WIRING DIAGRAM AS SHOWN
   F. REVERSE POLARITY COMPATIBLE VIA BRIDGE RECTIFIER CIRCUIT

3. MECHANICAL REQUIREMENTS/CONFIGURATION:
   A. TO BE A RECOGNIZED COMPONENT TO UL 864, FILE S24176
   B. FIRING PIN FORCE: 12 LBS [53N] MINIMUM
   C. MANUAL FORCE TO ACTUATE: NOT TO EXCEED 40 LBS [178N]
   D. TEMPERATURE RANGE: -4°F TO 131°F (-20°C TO +55°C)
   E. WIRE STRAIN RELIEF: 10LBS [44.5N] MINIMUM
   F. CORROSION RESISTANT MATERIAL OR FINISH ON EXTERIOR COMPONENTS
   G. ACTUATOR PIN TO BE IN THE LATCHED (RETRACTED) POSITION BEFORE SHIPPING
   H. OPTIONAL ACCESSORIES:
      i. MANUAL ACTUATION ASSEMBLY
      ii. RESET TOOL ATTACHMENT

4. LABELS
   1. TLX LABEL
   2. LOT CODE LABEL

PA0337 WIRE DIAGRAM

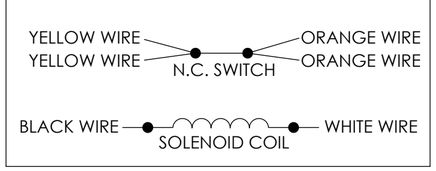

CUSTOMER P/N	REV	UNLESS OTHERWISE SPECIFIED:		NAME	DATE	TLX Technologies
THIRD ANGLE PROJECTION		DIMENSIONS ARE IN MILLIMETERS DIMENSIONS IN [ ] ARE INCHES TOLERANCES: ANGULAR: 1° LINEAR: ±0.13	DRAWN			TITLE: SUPERVISED LATCHING SOLENOID ACTUATOR
			CHECKED			
			ENG APPR.			
		SURFACE FINISH: 3.2 µm MAX. 0.13 MAX. EDGE BREAK ACCEPTABLE 0.13 MAX. CORNER RADIUS ACCEPTABLE	INTERPRET GEOMETRIC TOLERANCING PER: ASME Y 14.5-2018			
PROPRIETARY AND CONFIDENTIAL THE INFORMATION CONTAINED IN THIS DRAWING IS THE SOLE PROPERTY OF TLX TECHNOLOGIES. ANY REPRODUCTION IN PART OR AS A WHOLE WITHOUT THE WRITTEN PERMISSION OF TLX TECHNOLOGIES IS PROHIBITED.		MATERIAL FINISH				SIZE C · DWG. NO. PA0337 · REV
		ALL DIMENSIONS ARE POST PLATE				SCALE: 2:1 · DO NOT SCALE DRAWING · SHEET 7 OF 7